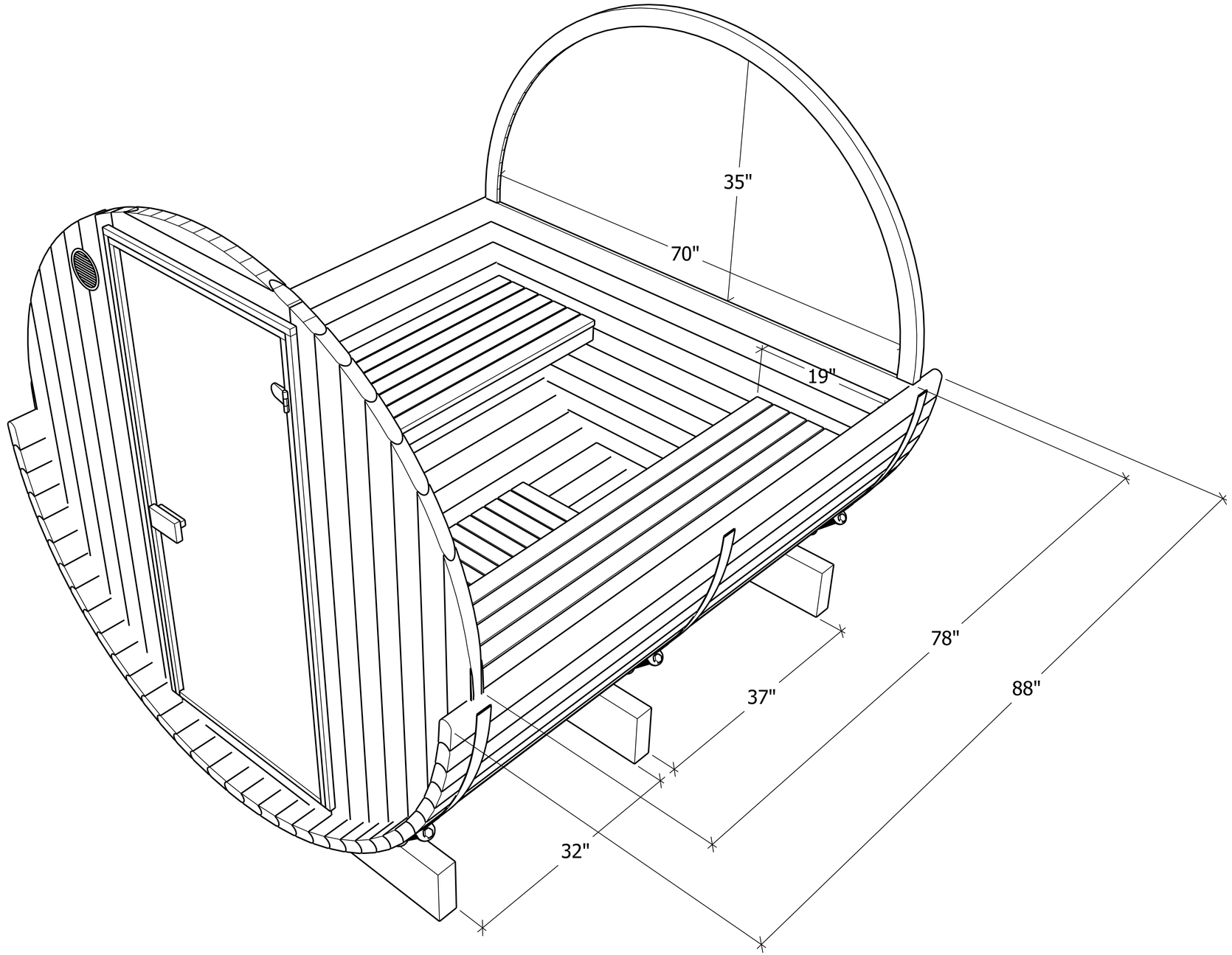
35"
70"
19"
78"
88"
37"
32"